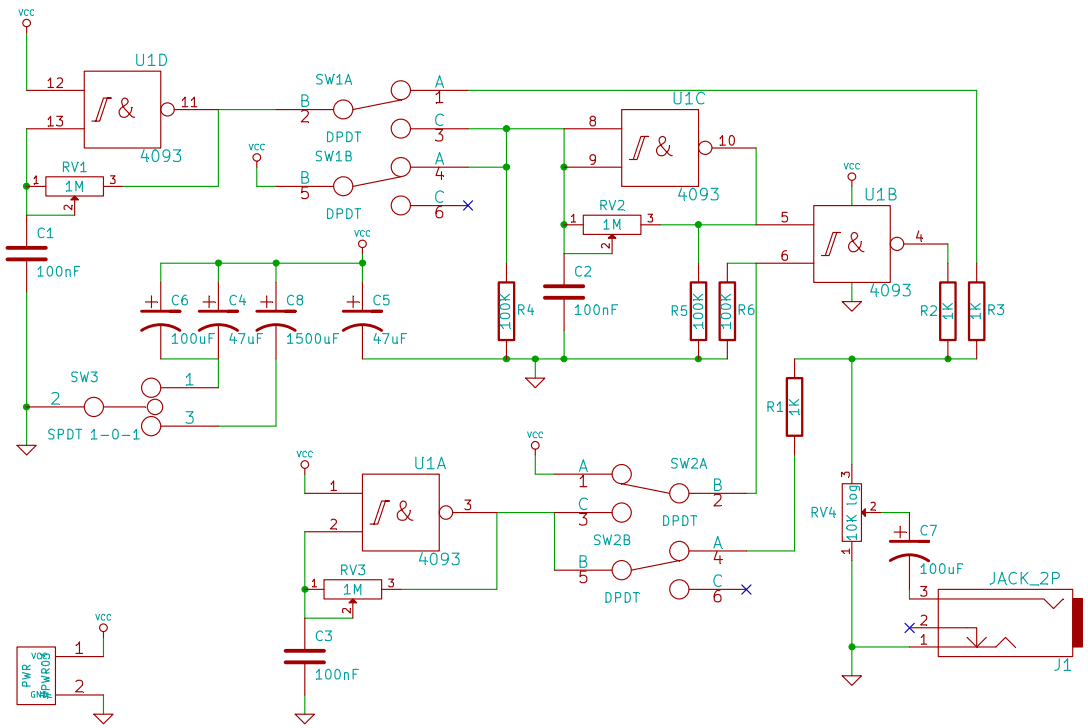

DimsOs 2011 Carl Jensen		
File: 4093 nand gate synth.sch		
Sheet: /		
Title: 4093 Nand Gate Synth		
Size: A4	Date: 29 may 2012	**Rev: 3.3**
KiCad E.D.A. eeschema (2012-01-19 BZR 3256)-stable		Id: 1/1